SGH-T400 Rev3.2 ASSY1

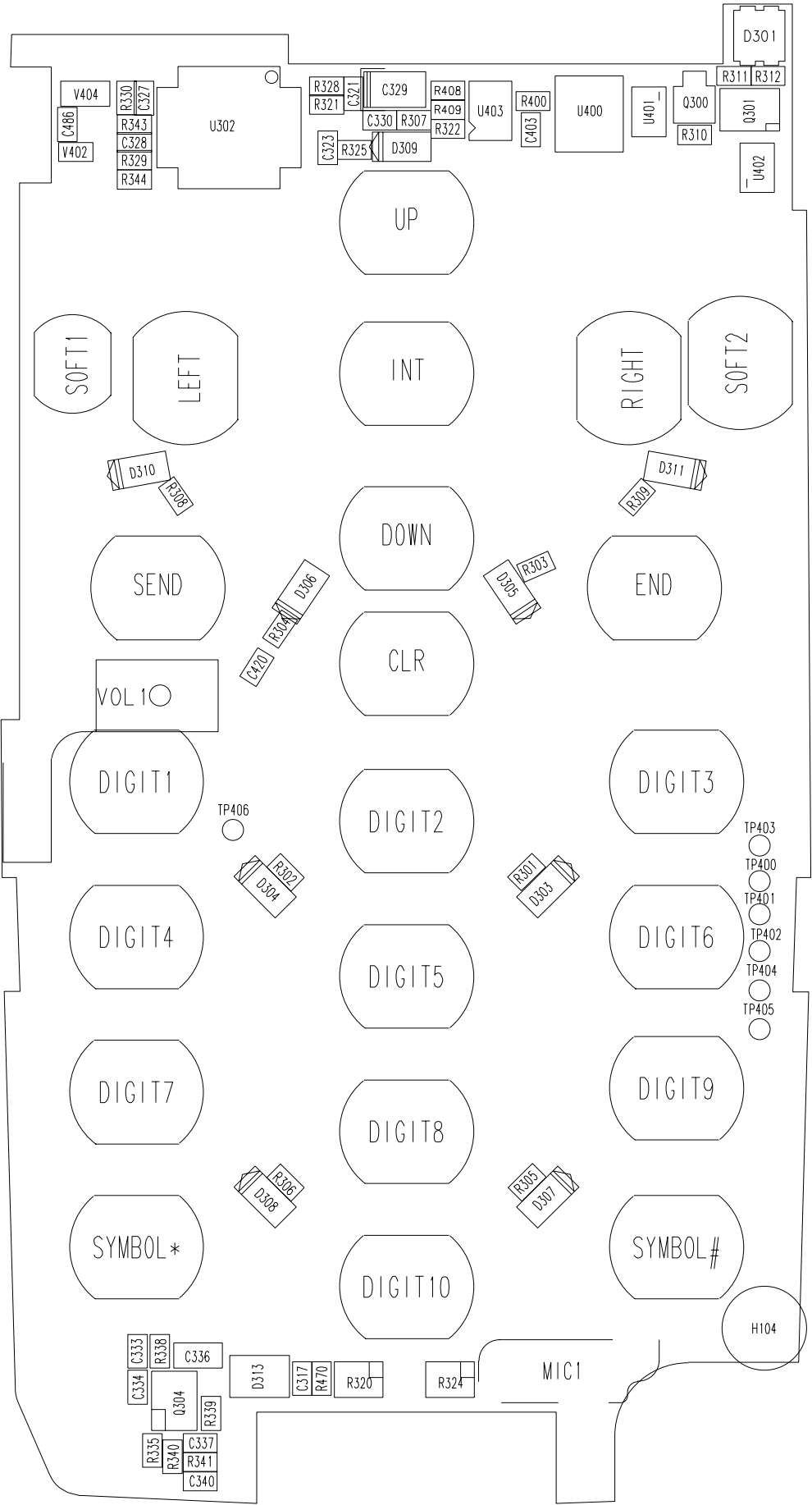

SGH-T400 Rev3.2 ASSY2

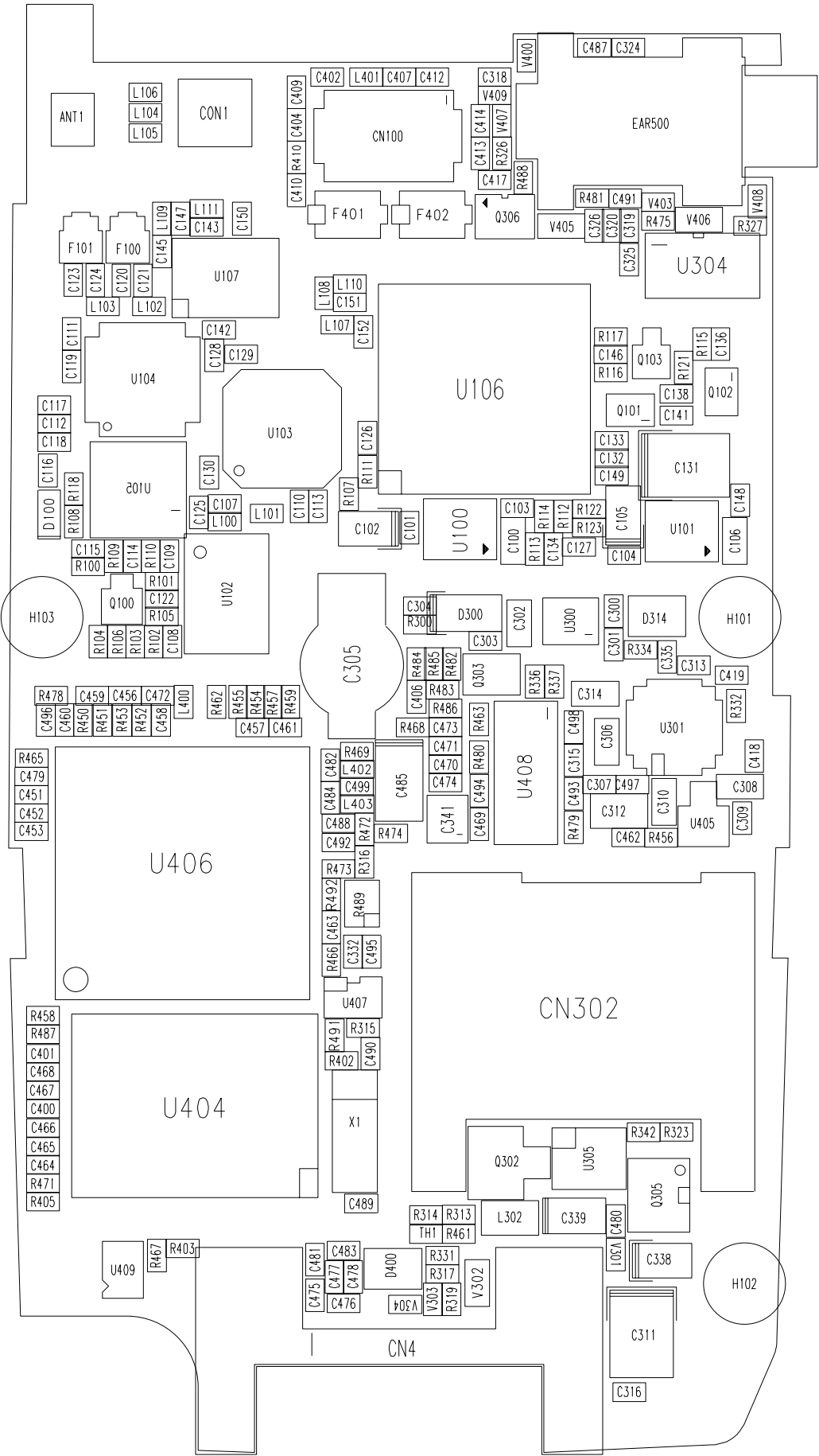

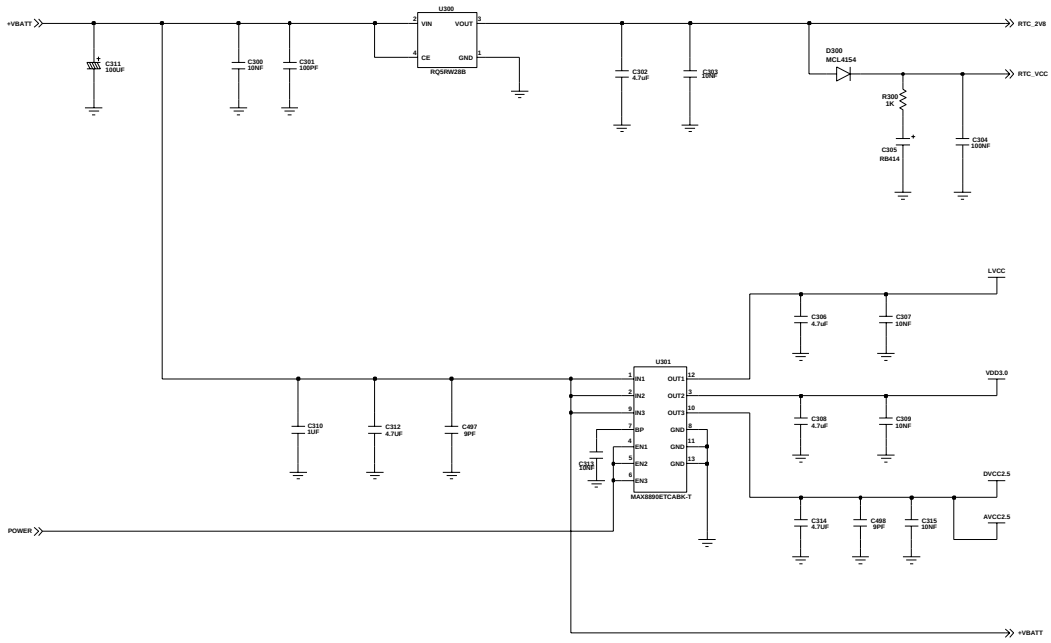

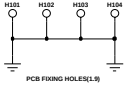

Title: POWER Management Schematic		
Size: A3	Document Number: SAMSUNG/T400/B.B/PSU	Rev: Rev 3.2
Date: Monday, Nov, 11, 2002	Sheet 1 of 10	

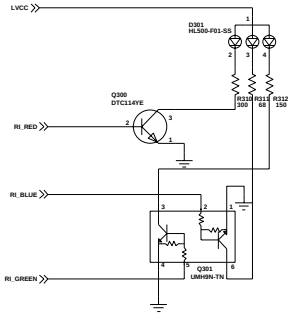

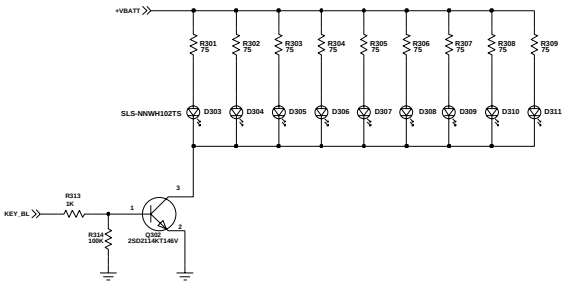

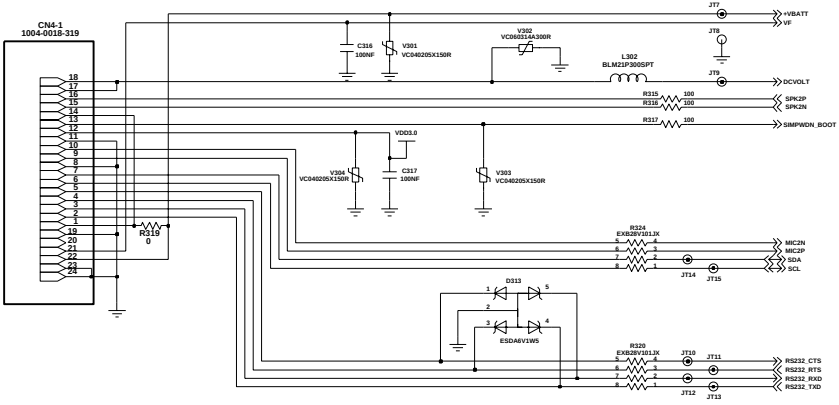

Title: IFCONNECTOR & LIGHT Schematic		
Size: A3	Document Number: SAMSUNG/T400/B.B/IFCONNECTOR & BL	Rev: Rev 3.2
Date: Monday, Nov, 11, 2002	Sheet 2 of 10	

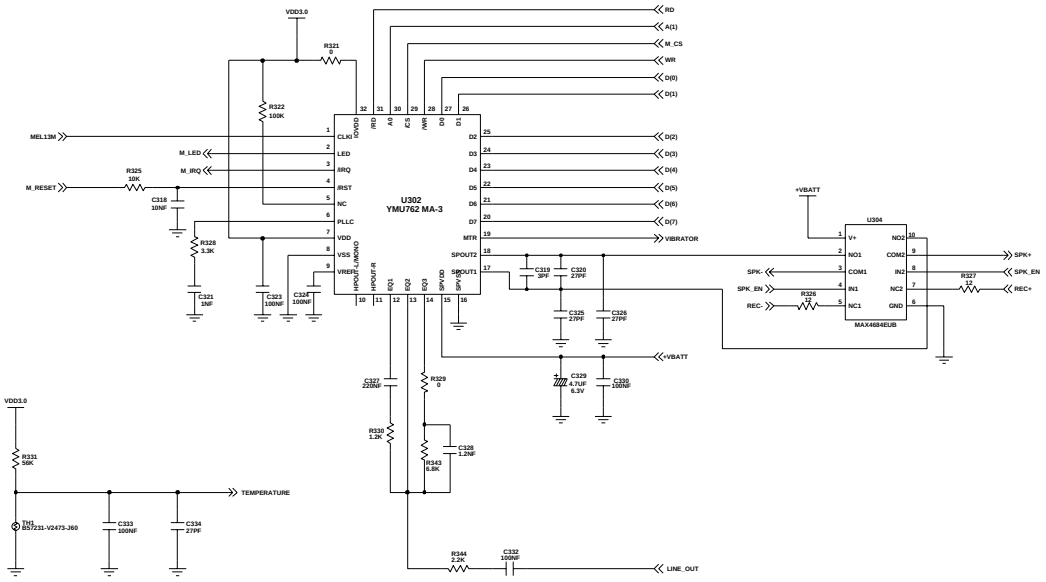

Title: **MELODY Schematic**		
Size: A3	Document Number: SAMSUNG/T400/B.B/MELODY	Rev: Rev 3.2
Date: Monday, Nov, 11, 2002	Sheet 3 of 10	

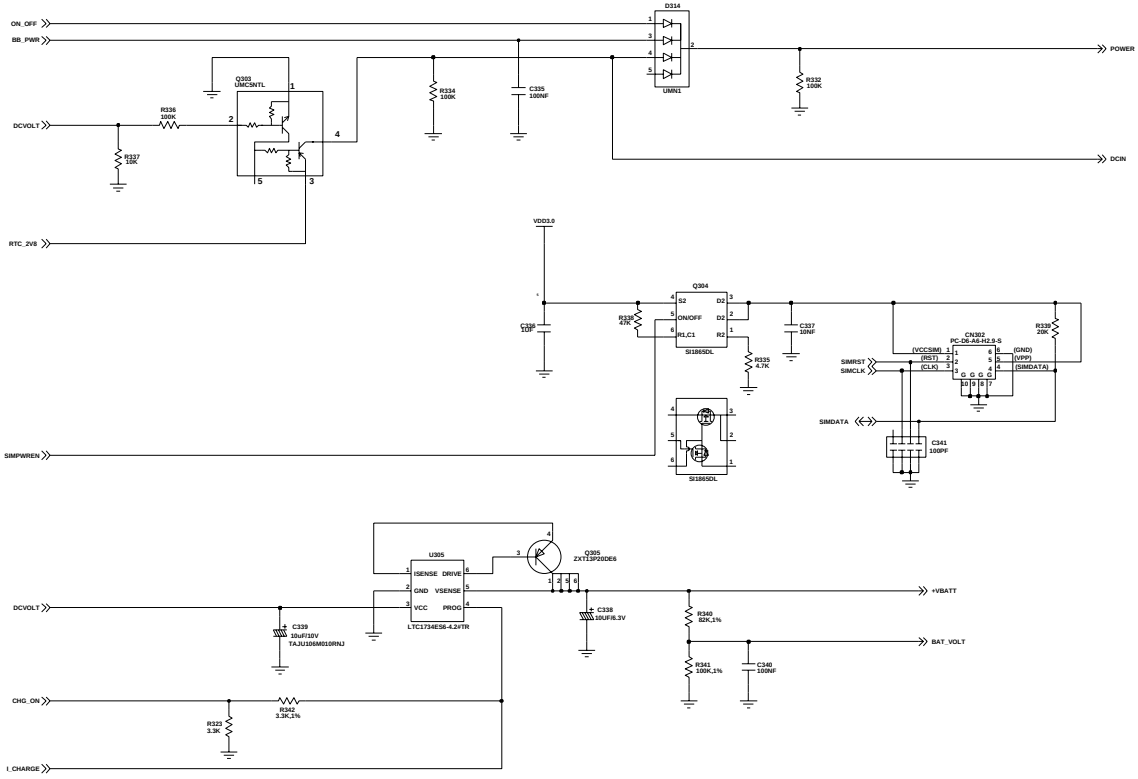

Title: **SIM and Charger Schematic**		
Size: A3	Document Number: SAMSUNG/T400/B.B/SIM and CHARGER	Rev: Rev 3.2
Date: Monday, Nov, 11, 2002	Sheet 4 of 10	

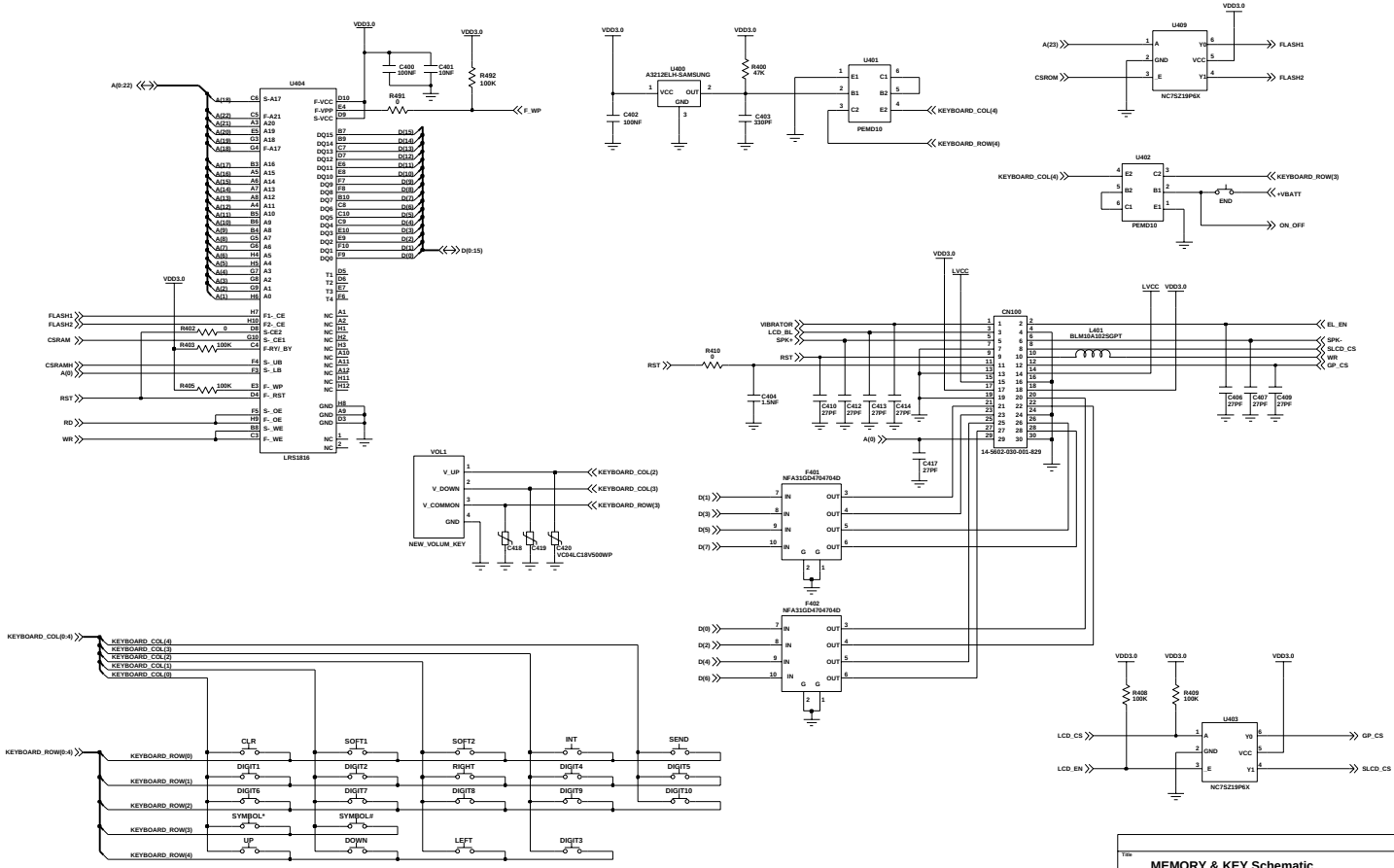

Title	MEMORY & KEY Schematic		
Size A3	Document Number SAMSUNG/T400/B.B/MEMORY & KEY		Rev Rev 3.2
Date: Monday, Nov, 11, 2002		Sheet 5 of 10	

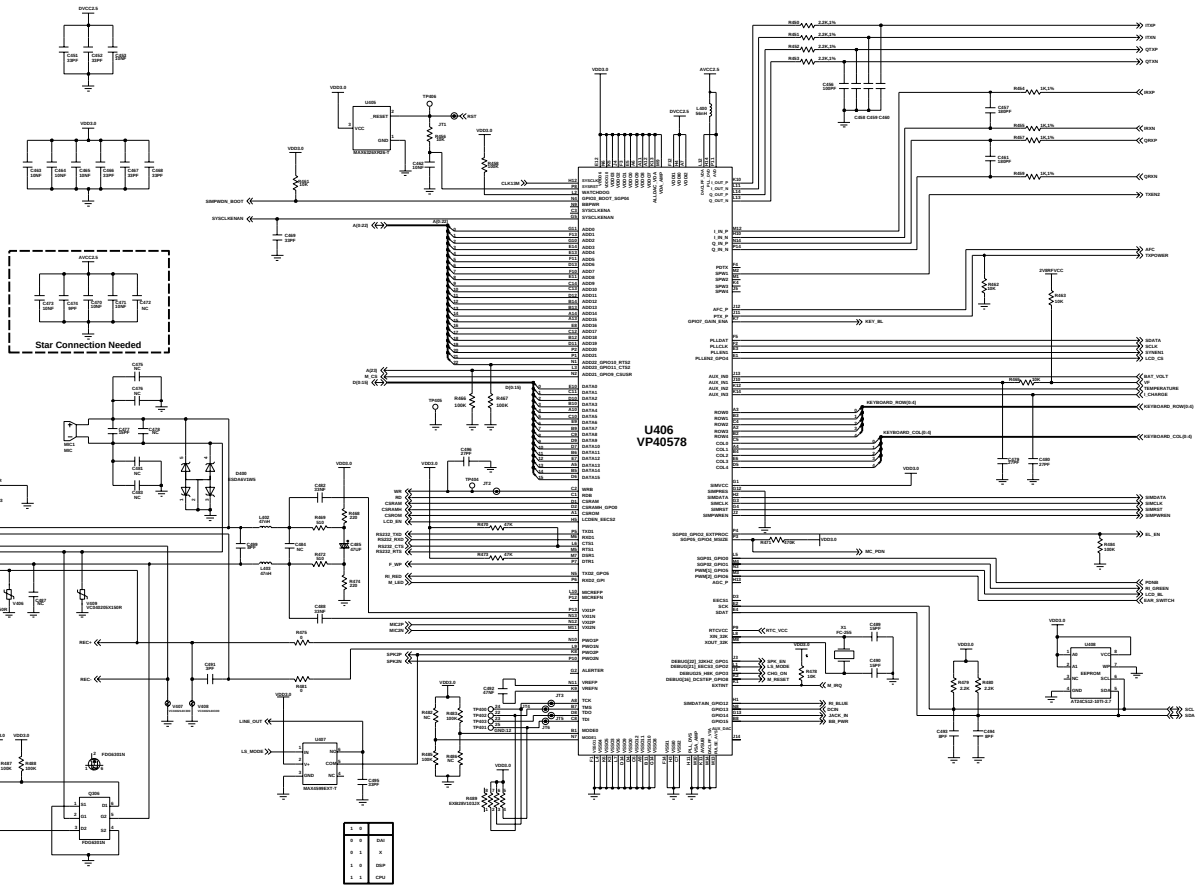
U406
VP40578
Star Connection Needed
ITSP
ITSN
QTSP
QTSN
IRSP
IRSN
QRSP
QRSN
TXSN2
AFC
TOPOWER
SDATA
SCLK
SYSEN1
LCD_CS
BAT_VOLT
VF
TEMPERATURE
I_CHARGE
KEYBOARD_ROW[0-5]
KEYBOARD_COL[0-5]
SIMDATA
SIMCLK
SIMRST
SIMPWREN
SL_IN
MC_PDN
PWM
R1_GREEN
LCD_BL
EAR_SWITCH
SCL
SDA
RTC_VCC
SPK_EN
LS_MODE
CHG_ON
M_RESET
M_IRQ
R1_BLUE
SCAN
JACK_IN
SD_PWR
SYSCLKENAN
WATCHDOG
GPO3_BOOT_SDP66
BBPWR
SYSCLKENA
SYSCLKENAN
BBPWON_BOOT
SYSCLKENAN
A[0-22]
ADD[0]
ADD[1]
ADD[2]
ADD[3]
ADD[4]
ADD[5]
ADD[6]
ADD[7]
ADD[8]
ADD[9]
ADD[10]
ADD[11]
ADD[12]
ADD[13]
ADD[14]
ADD[15]
ADD[16]
ADD[17]
ADD[18]
ADD[19]
ADD[20]
ADD[21]
ADD[22] GPO15_RTS2
ADD[21] GPO11_CTS2
ADD[21] GPO9_CSUSR
A[20]
M_CS
D[0-15]
DATA[0]
DATA[1]
DATA[2]
DATA[3]
DATA[4]
DATA[5]
DATA[6]
DATA[7]
DATA[8]
DATA[9]
DATA[10]
DATA[11]
DATA[12]
DATA[13]
DATA[14]
DATA[15]
WRB
RDB
CSRAM
CSRAM_GPO8
CSROM
LCDIN_SEC32
TXD1
RXD1
CTS1
RTS1
DSR1
DTR1
TXD2_GPO5
RXD2_GPO4
MICBIAFP
MICBIAFN
VXOP
VXON
VXIN
PWCOP
PWCON
PWCOP
PWCON
ALERTER
VREFP
VREFN
TCK
TMS
TDO
TDI
MODE0
MODE1
MODE2
MODE3
MODE4
MODE5
MODE6
MODE7
MODE8
MODE9
MODE10
MODE11
MODE12
MODE13
MODE14
MODE15
ALL_VDD
VDDA
VDDA
VDDA

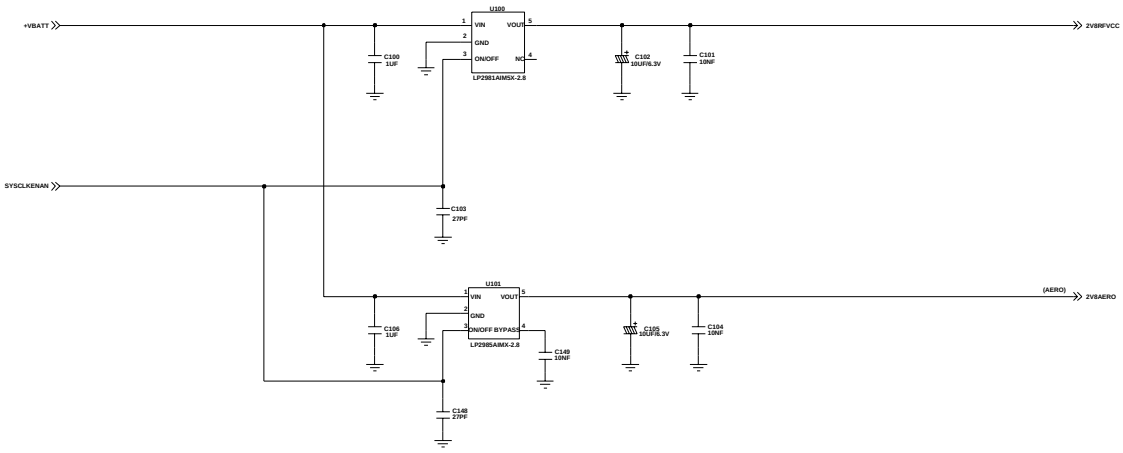

Title: **Radio PSU Schematic**		
Size: A3	Document Number: SAMSUNG/T400/RF/Radio Power Supply	Rev: Rev 3.2
Date: Monday, Nov, 11, 2002	Sheet 7 of 10	

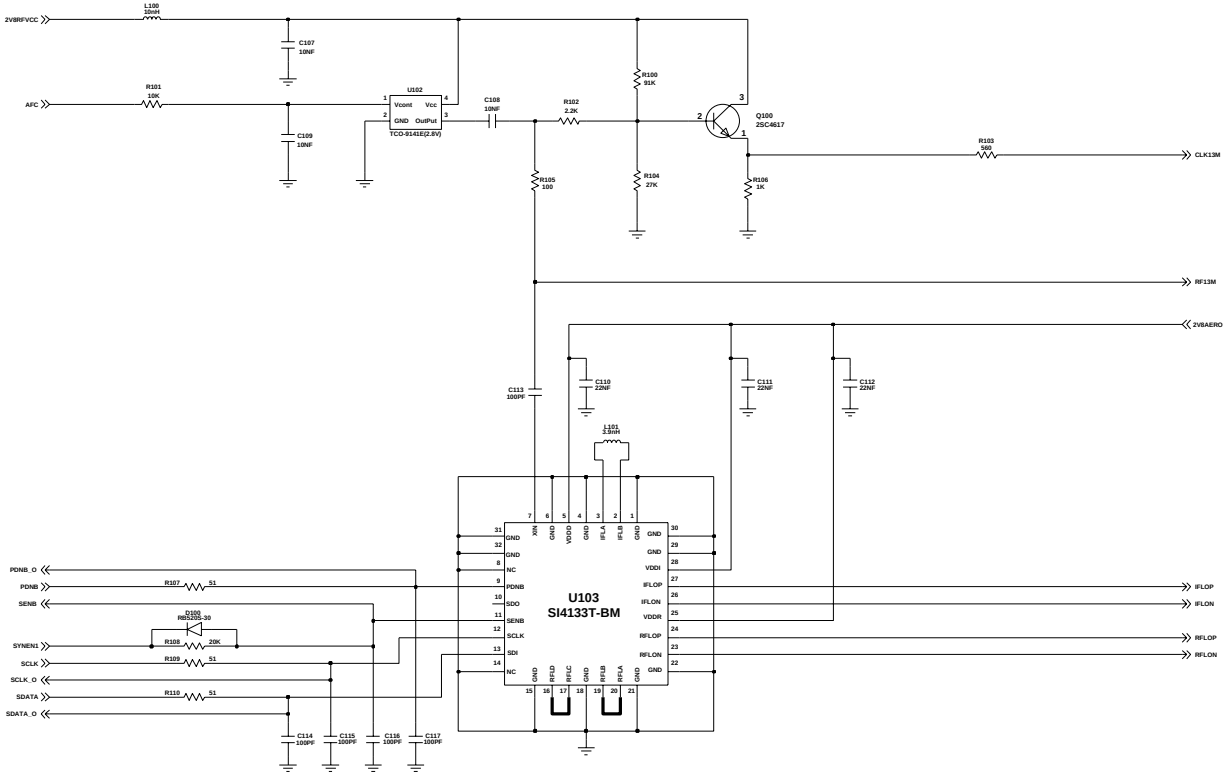

Title: **VCO and Synth Schematic**		
Size: A3	Document Number: SAMSUNG/T400/RF/VCTCXO and Dual Synthesizers	Rev: Rev 3.2
Date: Monday, Nov, 11, 2002	Sheet 8 of 10	

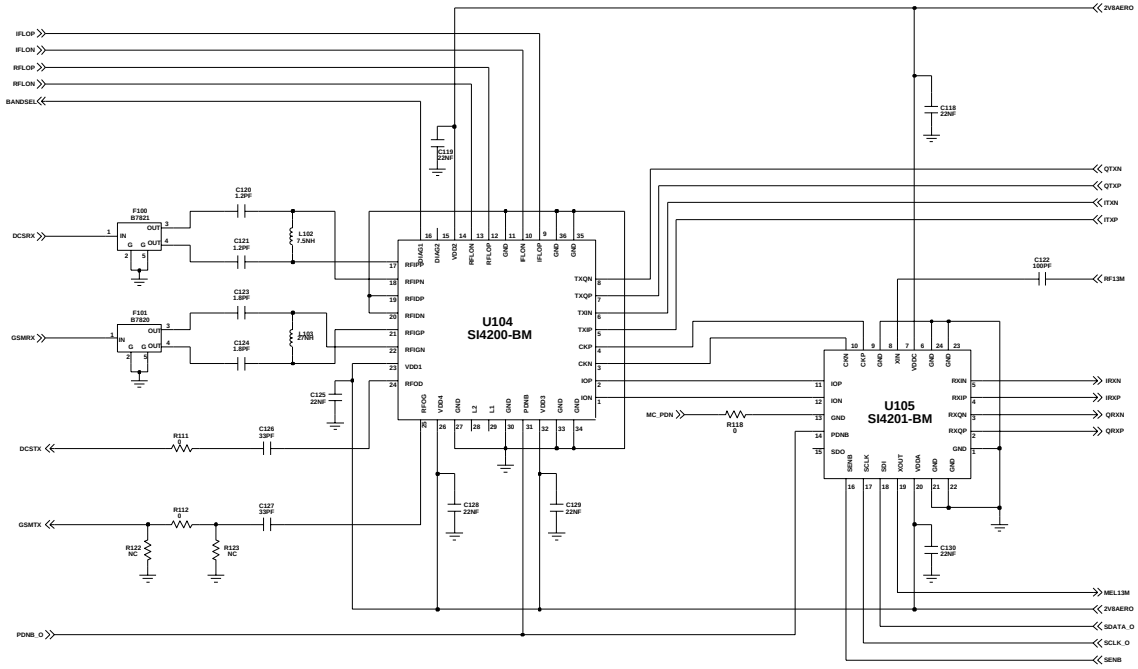

Title: **Bright IC and TXVCO Schematic**		
Size: A3	Document Number: SAMSUNG/T400/RF/Bright IC and TXVCO	Rev: Rev 3.2
Date: Monday, Nov, 11, 2002	Sheet 9 of 10	

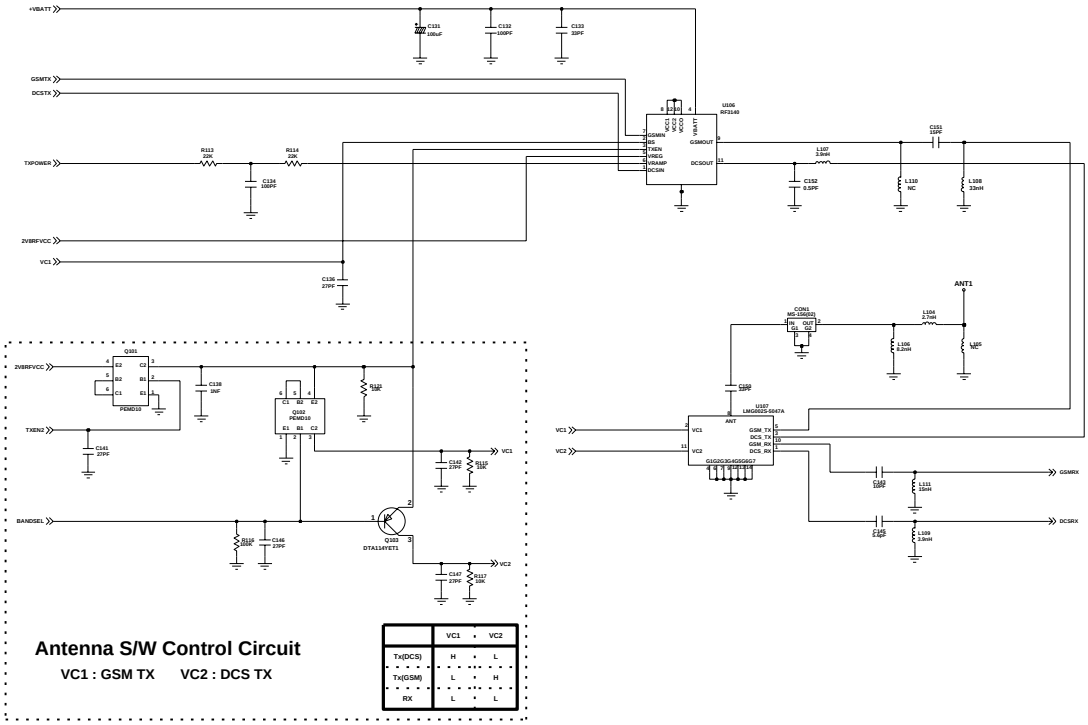

Title	Transmitter Schematic
Size A3	Document Number SAMSUNG/T400/RF/Transmitter
Rev Rev 3.2	
Date: Monday, Nov, 11, 2002	Sheet 10 of 10